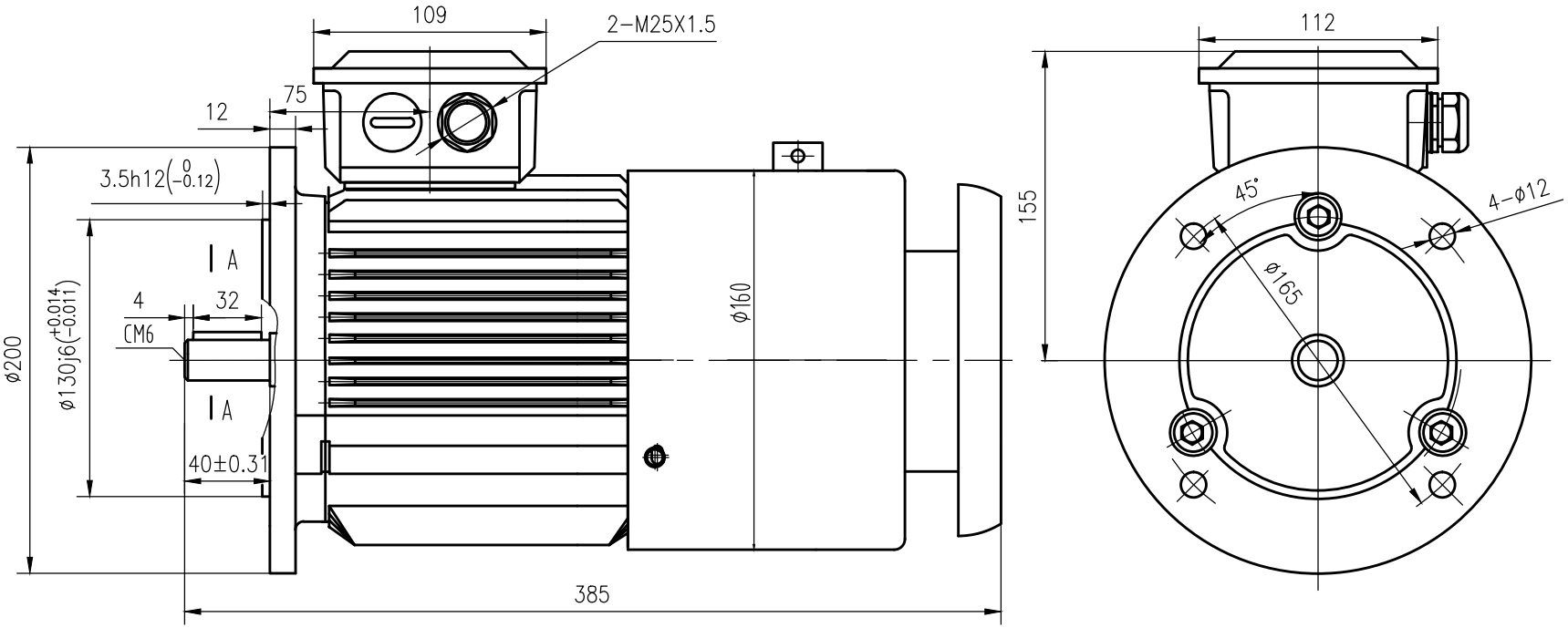

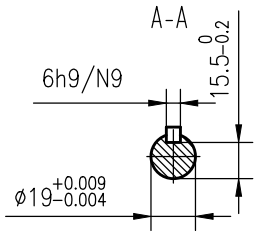

Mark	No.	Zone	File changing No.	Signature	Date

Design			Standard		
Check					
Auditing					
Technics			Approval		

Sign	Weight	Scale
		1:3
Total page	page No.	

OUTLINE

OMV0-080M0-04~08P V1

Wuxi OMEC LTD.